POWERJACKS

PRECISION ACTUATION

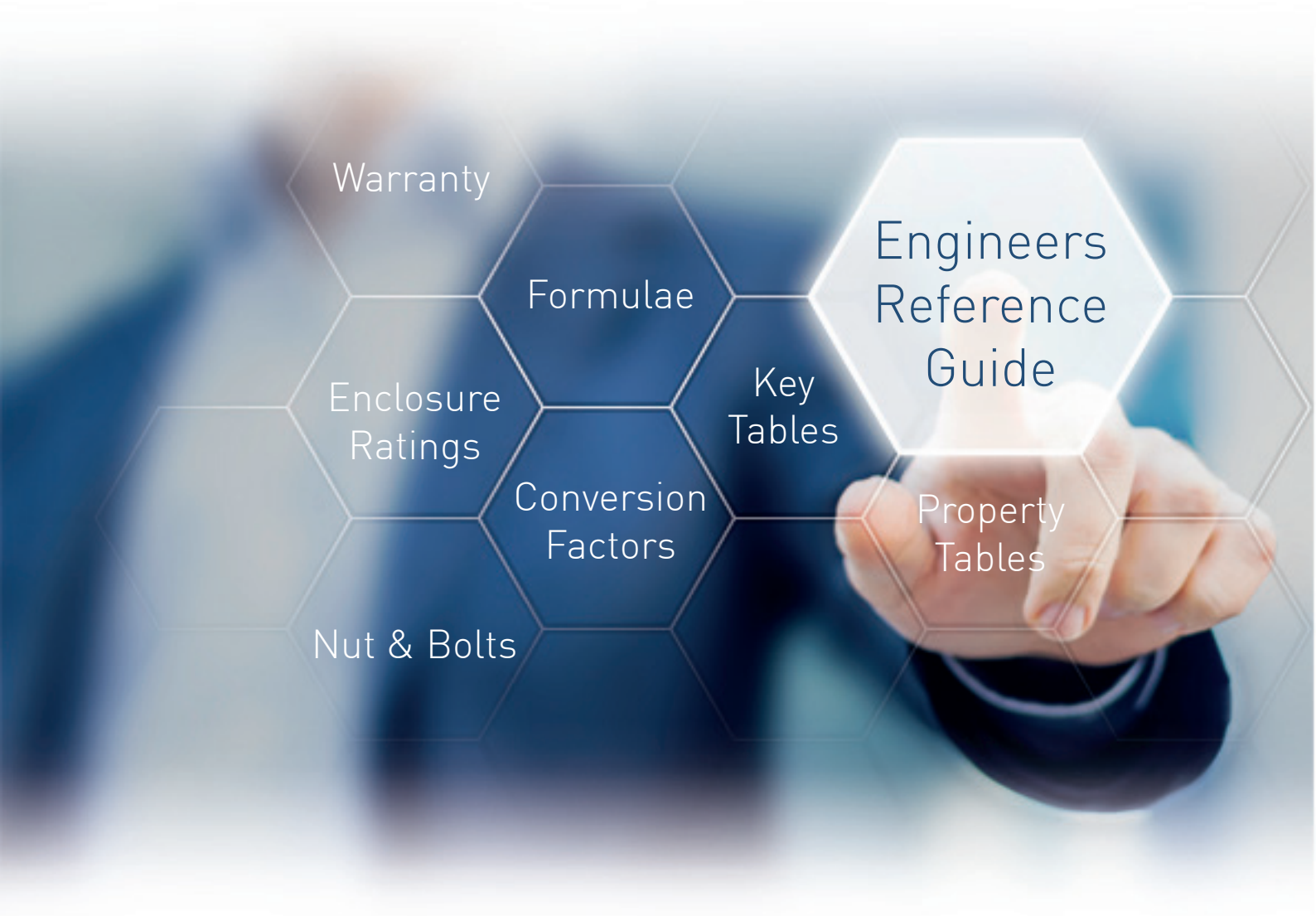

ENGINEERS REFERENCE USEFUL INFORMATION

POWERJACKS

USEFUL INFORMATION FOR ENGINEERS

Capability

OUR EXPERTISE HAS BEEN BUILT ON A HISTORY OF MORE THAN 100 YEARS OF ENGINEERING, CRAFTSMANSHIP, VISIONARY DESIGN, QUALITY MANUFACTURE AND CUSTOMER CARE.

Power Jacks is a manufacturing/engineering company specialising in the design and manufacture of actuation, lifting and positioning solutions for applications in Industrial Automation, Energy, Defence, Medical, Transport, and the Civil Engineering sectors.

Headquartered near Aberdeen in the UK, the company is the UK's largest screw jack manufacturing facility, that uses the latest engineering technologies to deliver quality products (BS EN ISO 9001) that offer reliability, performance and economy.

Power Jacks deliver this high quality service in a safe (OHSAS 18001) and environmentally friendly (ISO 14001) working environment thanks to the highly trained, flexible and motivated teams that work throughout the business driving the company to higher levels of performance.

We know our customers demand our engineering expertise to help find a solution for their applications. We take pride in designing and delivering the best solution using standard or special designs that help improve your business.

Our Vision is to become the partner of choice for our products globally
Our Mission is to provide high quality lifting & positioning solutions.

Global Reach

Power Jacks has local representation in 26 countries and supplies its products to more than 80 countries worldwide.

A global reach with a local service as we work closely with our customers to ensure the best solution for all their Electro-Mechanical solution applications.

- Headquarters & Factory
- Local Power Jacks Sales Offices
- Local Representative

Length	m	mm	inch	ft
1 m	1	1000	8mm	3.2808
1 mm	0.001	1	0.03937	32.8×10^{-3}
1 inch	0.0254	25.4	1	0.0833
1 ft	0.3048	304.8	12	1

Mass	kg	Tonne	lb	Ton (Short)	Ton
1 kg	1	0.001	2.2046	1.1023×10^{-3}	9.842×10^{-4}
1 Tonne	1000	1	2204.6	1.1023	0.9842
1 lb	0.45355937	4.536×10^{-4}	1	5×10^{-4}	4.464×10^{-4}
1 Tonne (Short)	907.185	0.907185	2000	1	0.8929
1 Ton	1016.05	1.016	2240	1.120	1

Force / Weight	N	kgf	kp	lbf
1 N	1	0.1019716	0.120	0.224809
1 kgf	9.80665	1	1	2.2046
1 kp	9.80665	1	1	2.2046
1 lbf	4.44822	0.45359237	0.4536	1

Speed	N	mm/s	ft/s	in/s
1 m/s	1	1000	3.2808	39.37
1 mm/s	0.001	1	3.28×10^{-3}	0.03937
1 ft/s	0.3048	304.8	1	12
1 in/s	0.0254	25.4	0.0833	1

Torque / Work	Nm	kgf.cm	lbf.in	lbf.ft
1 Nm	1	10.19716	8.8507	0.73756
1 kfg.cm	9.80665×10^{-2}	1	0.8679	0.07233
1 lbf.in	0.1129848	1.1521	1	0.08333
1 lbf.ft	1.35582	13.825	12	1

Power	kW	Nm/min	kgf.m/s	hp	lbf.ft/min
1 kW	1	60000	10.20	1.34	44220
1 Nm/min	1.667×10^{-4}	1	1.699×10^{-3}	2.235×10^{-5}	0.7374
1 kgf.m/s	9.807×10^{-3}	588.6	1	0.01315	433.73
1 hp	0.7457	44741	76.04	1	33000
1 lbf.ft/min	2.261×10^{-5}	1.3566	2.3056×10^{-3}	3.03×10^{-5}	1

Inertia	kg.m^2 (mr$^{2)}$	kpms^2	lbf.ft2 (WK^2)	lbf.in2 (WK^2)
kg.m^2 (mr^2)	1	0.10197	23.73	3417.2
1 kpms^2	9.807	1	232.6	33488
1 lbf.ft2 (WK^2)	0.0421	4.30×10^{-3}	1	144
1 lbf.in2 (WK^2)	2.9264×10^{-4}	0.6192	6.944×10^{-3}	1

Stress / Pressure	MPa (N/mm^2)	N/m^2	kg/cm^2	lbf/inch^2	lbf/ft^2
1 MPa (N/mm2)	1	1×10^{-6}	10.2	145.039	20885.6
1 N/m^2	1×10^{-6}	1	10.2×10^{-6}	145×10^{-6}	20.88×10^{-6}
1 kg/cm^2	9.807×10^{-2}	9.81×10^{3}	1	14.2233	2.05×10^{3}
1 lbf/inch^2	9.8947×10^{-3}	6.89×10^{3}	0.070307	1	144
1 lbg/ft^2	4.7879×10^{-5}	47.88026	0.488×10^{-3}	6.94×10^{-3}	1

Temperature	
T °F	(T °C x 1.8) + 32°
T °C	(T °F -32) / 1.8

IEC Ratings

1st Digit : Solid Ingress		2nd Digit : Liquid Ingress	
0	No special protection	0	No special protection
1	A large surface of the body, such as hand (but no protection against deliberate acces.) Solid objects >50 mm diameter.	1	Dripping water (vertically falling drops).
2	Fingers or similar objects not exceeding 80mm in length. Solid objects >12mm in diameter.	2	Vertically dripping water when the enclosure is tilted at any angle up to 15º from its normal position.
3	Tools, wires, etc. of diameter or thickness >2.5mm. Solid objects >1mm diameter.	3	Water falling as a spray at an angle of 60º from the vertical.
4	Wires or strips of thickness >1mm. Solid objects >1mm diameter.	4	Water splashed against the enclosure from any direction.
5	Ingress of dust is not totally prevented, but dust does not enter in sufficient quantity to interfere with satisfactory operation of the equipment.	5	Water projected by a nozzle against the enclosure.
6	No ingress of dust.	6	Water from heavy seas or projected in powerful jets.
		7	Ingress of water in a harmful quantity not possible when the enclosure is immersed under defined conditions of pressure and time.
		8	Submersible under defined conditions of pressure and time.

NEMA and IEC Equivalent Enclosures

Since the IEC degree of protection for enclosed equipment is defined differently from NEMA type enclosure protection, and methods of test are different, exact correlation between IEC IP-type designations and NEMA types is not possible. It is possible to make rough comparisons, which may result in certain applications.The common NEMA type designations compare with IEC designations as follows:

NEMA Type		Nearest IEC Equivalent	
NEMA 1	General protection of people from live parts. Protection against falling dirt. Test: 1/8" to 1/2" (3.175 to 12.7mm) rod entry test and rust resistance tests.	IP2X (1)	Protected against solid objects greater than 12mm. Test: Metallic test finger and 12mm sphere tests. No IEC rust resistance test.
NEMA 3	Dust-tight and sleet resistant. Test: Rain, dust, external icing and rust resistance test.	IP54	Dust protected. Protected against splashing water. Test: Dust and oscillating sprinkler tests. No IEC rust resistance test.
NEMA 3R	Rain-proof and sleet resitant. Test: Rod entry 1/8" to 1/4" (3.175 to 6.35mm), rain, external icing and rust resistance tests.	IP34	Protected against solid objects greater than 2.5mm. Protected against splashing water. Test: 2.5mm rod and oscillating sprinkler tests. No IEC rust resistance or icing tests.
NEMA 4	Water-tight and dust-tight. Test: Hosedown, rust-resistance and external icing tests.	IP65	Dust-tight and protected against water jets. Test: Dust and spray nozzle tests. no rust resistance or external icing test.
NEMA 4X	Water-tight, dust-tight and corrosion resistance. Test: Hosedown, corrosion resistance and external icing tests.	IPW65 (2)	Dust-tight and protected against water jets. Test: Dust and spray nozzle tests. No rust resistance or external icing test.
NEMA 7	Hazardous gas.	-	No IEC equivalent.
NEMA 9	Hardous dust.	-	No IEC equivalent.
NEMA 12	Dust-tight and drip-tight. Test: Drip, dust and rust resistance tests.	IP61	Dust-tight and protected against dripping water. Test: Dust and rain simulator tests. No IEC rust resistance test.
NEMA 18	Oil tight and dust tight. Test: Oil-tightness and rust-resistance tests.	IP6X (1)	Dust-tight. Test: Dust test. No IEC oil-tightness or rust resistance tests.

Note

1. When only one characteristic numeral is used the second numeral is replaced by an 'X'.
2. 'W' inserted after the 'IP' indicates suitable for a specified weather condition (conditions and features specified by manufacturer.

Thread Size	Pitch	Hexagon Bolts & Nuts			Sockets Head Cap Screw		
D		A	H	K	R	T	W
M3	0.50	5.5	2.125	2.4	5.5	3.0	2.5
M4	0.70	7.0	2.925	3.2	7.0	4.0	3.0
M5	0.80	8.0	3.650	4.0	8.5	5.00	4.0
M6	1.00	10.0	4.150	5.0	10.0	6.0	5.0
M8	1.25	13.0	5.650	6.5	13.0	8.0	6.0
M10	1.50	17.0	7.180	8.0	16.0	10.0	8.0
M12	1.75	19.0	8.180	10.0	18.0	12.0	10.0
(M14)	2.00	22.0	9.180	11.0	21.0	14.0	12.0
M16	2.00	24.0	10.180	13.0	24.0	16.0	14.0
(M18)	2.50	27.0	12.215	15.0	27.0	18.0	14.0
M20	2.50	30.0	13.215	16.0	30.0	20.0	17.0
(M22)	2.50	32.0	14.215	18.0	33.0	22.0	17.0
M24	3.00	36.0	15.215	19.0	36.0	24.0	19.0
(M27)	3.00	41.0	17.215	22.0	40.0	27.0	19.0
M30	3.50	46.0	19.620	24.0	45.0	30.0	22.0
(M33)	3.50	50.0	21.260	26.0	50.0	33.0	24.0
M36	4.00	55.0	23.260	29.0	54.0	36.0	27.0
(M39)	4.00	60.0	25.260	31.0	-	-	-
M42	4.50	65.0	26.260	34.0	63.0	42.0	32.0

Hexagon Bolt

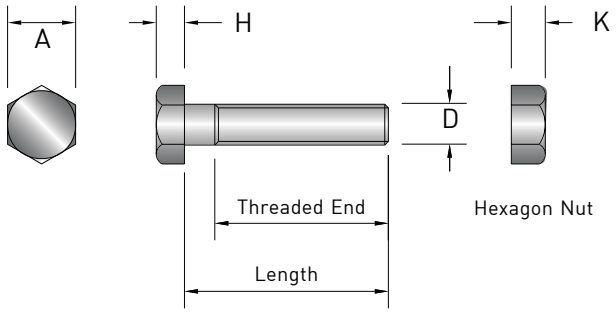

Socket Head Cap Screw

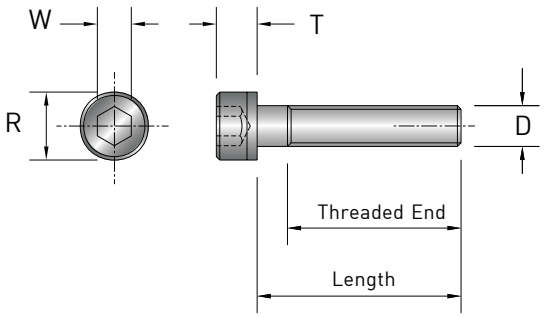

Note

1. All dimensions in millimetres.
2. Sizes in brackets are non-preferrred standards.
3. All dimensions are maximum sizes.

Enlarged Detail of Key and Keyways

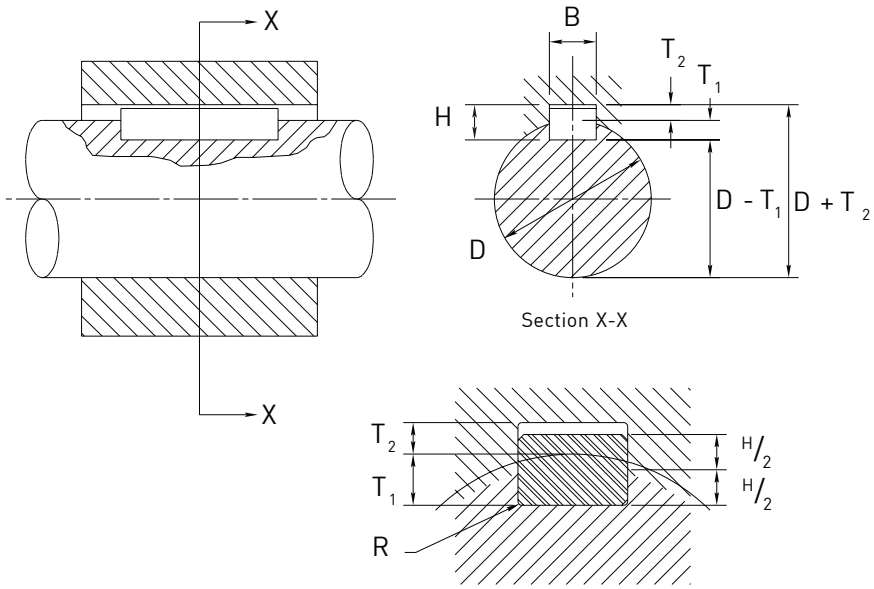

Symbol		Key	Keyway											
Nominal Diameter D		B x H width x thick-ness	Width, B						Depth				Radius, R	
			Nom	Tolerance for class of fit										
				Free		Normal		Close and Interference	Shaft, T1		Hub, T2			
Over	Incl			Shaft (H9)	Hub (D10)	Shaft (N9)	Hub (Js9)	Shaft and Hub (P9)	Nom.	Tol.	Nom.	Tol.	Max.	Min.
6	8	2 x 2	2	+0.025	+0.060	-0.004	+0.012	-0.006	1.2	+0.1	1.0	+0.1	0.16	0.08
8	10	3 x 3	3	0	+0.020	-0.029	-0.012	-0.031	1.8	0	1.4	0		
10	12	4 x 4	4	+0.030	+0.078	0	+0.015	-0.012	2.5		1.8			
12	17	5 x 5	5	0	+0.080	-0.030	-0.015	-0.042	3.0		2.3		0.25	0.16
17	22	6 x 6	6						3.5		2.8			
22	30	8 x 7	8	+0.036	+0.095	0	+0.018	-0.015	4.0	+0.2	3.3	+0.2		
30	38	10 x 8	10	0	+0.040	-0.036	-0.018	-0.051	5.0	0	3.3	0	0.40	0.25
38	44	12 x 8	12						5.0		3.3			
44	50	14 x 9	14	+0.043	+0.120	0	+0.021	-0.018	5.5		3.8			
50	58	16 x 10	16	0	+0.050	-0.043	-0.021	-0.061	6.0		4.3			
58	65	18 x 11	18						7.0		4.4			
65	75	20 x 12	20						7.5		4.9		0.60	0.40
75	85	22 x 14	22	+0.052	+0.149	0	+0.026	-0.022	9.0		5.4			
85	95	25 x 14	25	0	+0.065	-0.052	-0.026	-0.074	9.0		5.4			
95	110	28 x 16	28						10.0		6.4			
110	130	32 x 18	32						11.0		7.4			
130	150	36 x 20	36	+0.062	+0.180	0	+0.031	-0.022	12.0	+0.3	8.4	+0.3	1.00	0.70
150	170	40 x 22	40	0	+0.080	-0.062	-0.031	-0.088	13.0	0	9.4	0		
170	200	45 x 25	45						13.0		10.4			

Note

For full range and further informtion refer BS 4235: Pt 1: 1972

Physical Property Values, at 20°C

Material	Carbon Steel	Aluminium Alloys	Brass 65/35	Copper	Stainless Steel
Density, ρ (kg/m³)	7860	2710	8450	8910	7750
Young's Modulus, E (GN/m²)	207	710	105	119	190
Shear Modulus, G (GN/m²)	79.3	26.2	38	44.7	73.1
Bulk Modulus, K (GN/m²)	172	57.5	115	130	178
Poisson's Ratio, ν	0.292	0.334	0.35	0.326	0.305
Coefficient of Thermal Expansion x 10^{-6}/K	12	22	19	17	14
Specific Heat J/kg K	460	920	420	420	460

Note

Values given are representative. Exact values may vary with composition and processing, sometimes greatly.

Standard SI Prefixes * †

Name	System	Factor
exa	E	1 000 000 000 000 000 000 = 10^{18}
peta	P	1 000 000 000 000 000 = 10^{15}
tera	T	1 000 000 000 000 = 10^{12}
giga	G	1 000 000 000 = 10^{9}
mega	M	1 000 000 = 10^{6}
kilo	k	1 000 = 10^{3}
hecto ‡	h	100 = 10^{2}
deca ‡	da	10 = 10^{1}
deci ‡	d	0.1 = 10^{-1}
centi ‡	c	0.01 = 10^{-2}
milli	m	0.001 = 10^{-3}
micro	μ	0.000 001 = 10^{-6}
nano	n	0.000 000 001 = 10^{-9}
pico	p	0.000 000 000 001 = 10^{-12}
femto	f	0.000 000 000 000 001 = 10^{-15}
atto	a	0.000 000 000 000 000 001 = 10^{-18}

* If possible use multiple and submultiple prefixes in steps of 1000.
† Spaces are used in SI instead of commas to group numbers to avoid confusion with the practise in some European countries of using commas for decimal points.
‡ Not recommened but sometimes encountered.

POWERJACKS
PRECISION ACTUATION

Power Jacks specialises in the design and manufacture of precision linear actuation, positioning and lifting equipment.

Our products are supplied globally across many sectors including Industrial Automation, Energy, Transport, Defence and Civil.

Power Jacks Ltd
Kingshill Commercial Park
Prospect Road, Westhill
Aberdeenshire AB32 6FP
Scotland (UK)
Tel: +44 (0)1224 968968

www.powerjacks.com
sales@powerjacks.com

PJBSC-ER-EN-02

bsi. ISO 9001 Quality Management FM 23810 | OHSAS 18001 Occupational Health and Safety Management OH 623565 | ISO 14001 Environmental Management EM 623286

FPAL empowered by Achilles Registered

MADE IN BRITAIN

All information in this document is subject to change without notice. All rights reserved by Power Jacks Limited.
May not be copied in whole or in part. ©Power Jacks Limited 2018, Aberdeenshire, Scotland, United Kingdom.

Follow Us Facebook LinkedIn Twitter